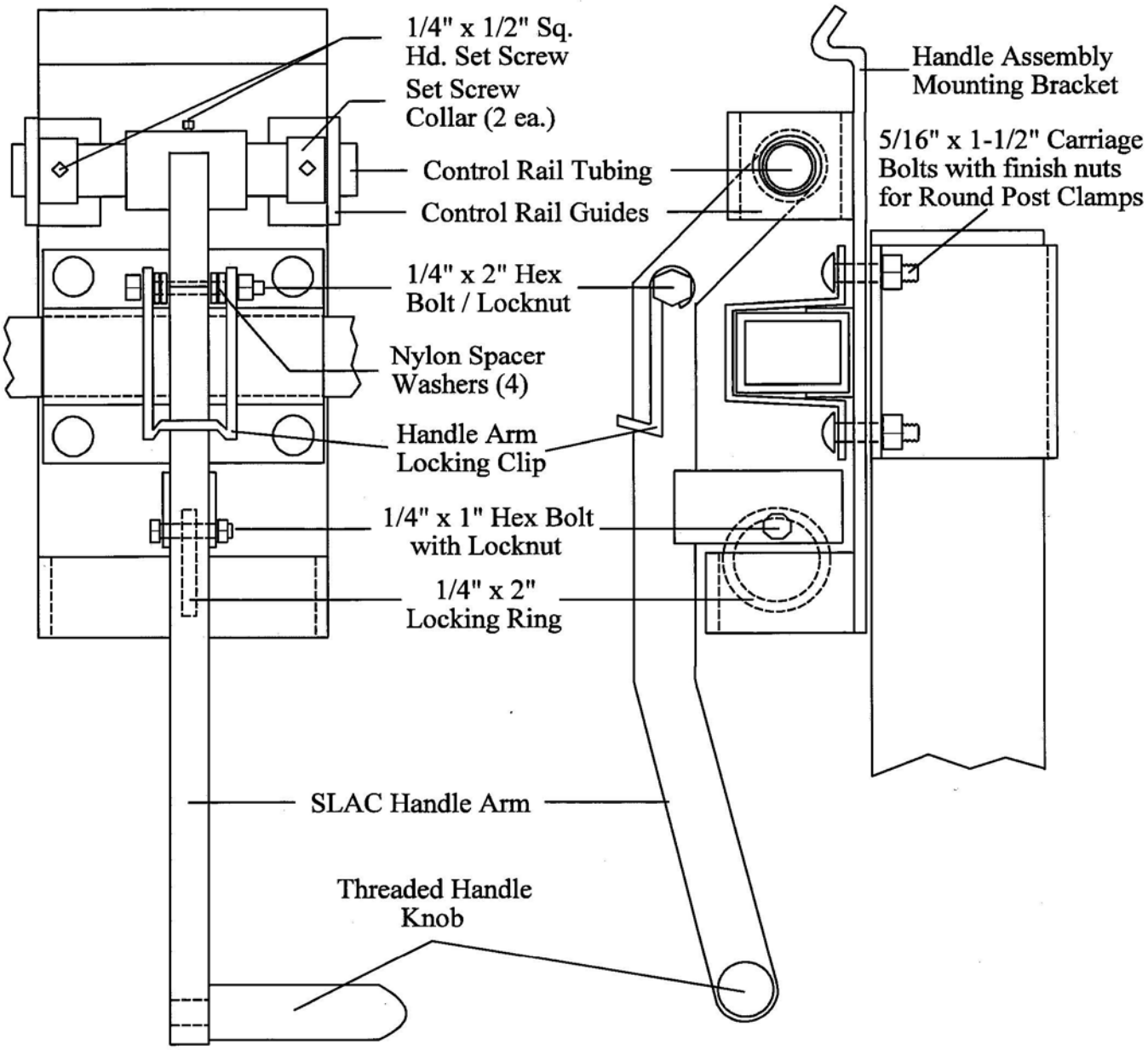PARTS GUIDE FOR "SLAC" HANDLE